REVISIONS					
LTR	DESCRIPTION	DATE	REV.	CHKD.	APVD.
1 x1	安規編號更新	2005.04.28	鍾昌明		夏正雄
2 x1	修正產品 UL Logo	2008.07.16	鄭伍豐	陸昌妹	蔡志祿
3 x2	CSA安規編號變更,文件編號變更印刷,更換標,刪除CEN080026,增加cUL認證編號	2008.07.16	鄭伍豐	陸昌妹	蔡志祿
4 x1	To change the mark of housing (ECR C03150547)	2015.07.09	陳衛兵	張啟濤	陳宗碧
5 x2	Cancel the CSA mark (CSA Reference No)ECR C03150547	2018.08.10	李阮龍	李阮龍	李阮龍

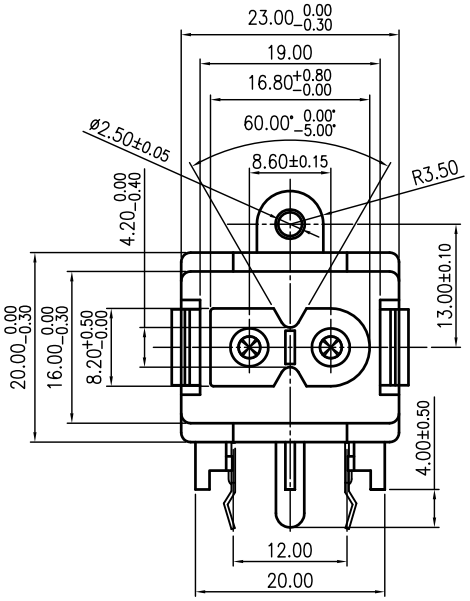

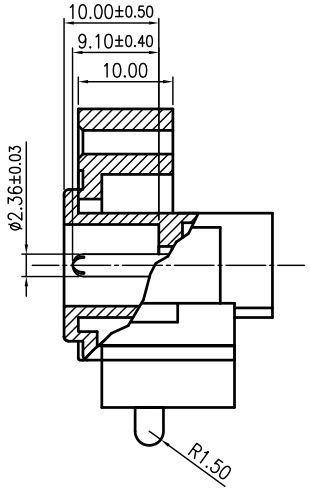

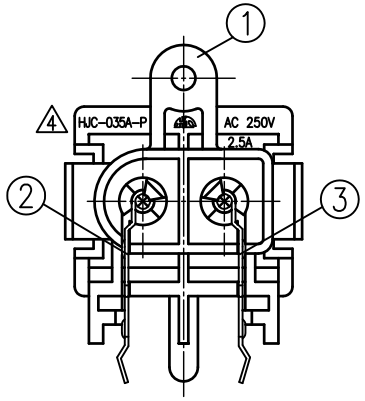

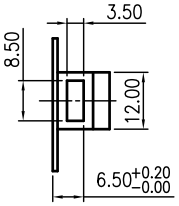

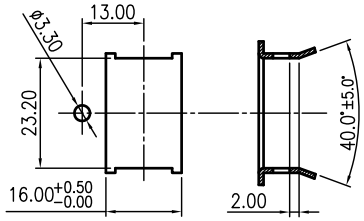

PANEL

REFERENCE DRAWING
(TOLERANCE : ±0.1)

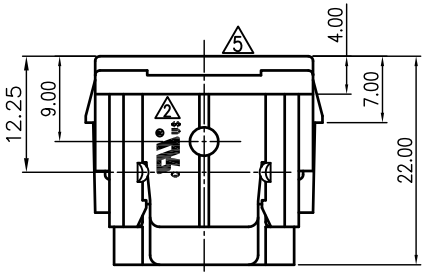

5 3 1 Note : Approved Standard: UL&cUL FILE NO.: E95834

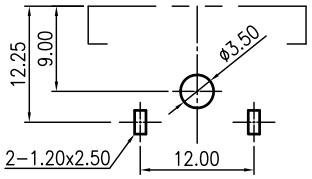

PCB Layout Dimension (Tolerance:±0.10)
(Recommend min. Dimension)(Bottom View)

LTR	PART NAME	Q'TY	MATERIAL	REMARK
3	PIN−2	1	C2680R t=0.40	MBCu−Sn plated
2	PIN−1	1	C2680R t=0.40	MBCu−Sn plated
1	HOUSING	1	PPHOX(N225/N225X) UL 94V-0	Black

DIMENSION	TOLERANCE
120~315	±0.50
30~120	±0.35
6~30	±0.22
BELOW 6	±0.16

DWN	劉怡廷	DATE	2005.04.28
DSND	蘇建源	DATE	1999.04.17
CHKD	夏正雄	DATE	2005.04.28
APVD	楊仲民	DATE	2005.04.28

SCALE N/A
PROJECTION
UNIT: mm

KUNMING ELECTRONICS CO.,LTD.

NAME: AC POWER SOCKET
CAT. NO.: HJC−035A−P
DWN.NO.: A−035A−P
1/1
E−001

UNLESS OTHERWISE SPECIFIED, TOLERANCE ON DECIMAL:±0.30 ANGLES:±5°

The raw material specified by Sony should meet SS−00259 requirement of the latest version. When such material is used, it should be supplied by Sony designated suppliers.