REVISIONS					
LTR	DESCRIPTION	DATE	REV.	CHKD.	APVD.

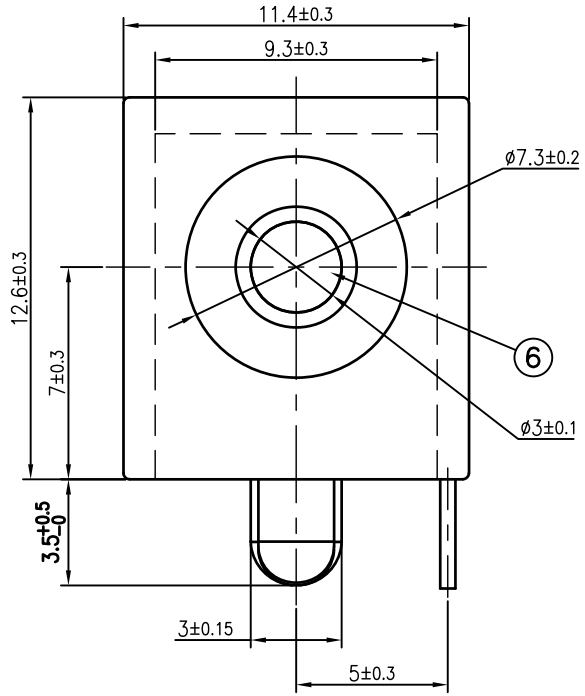

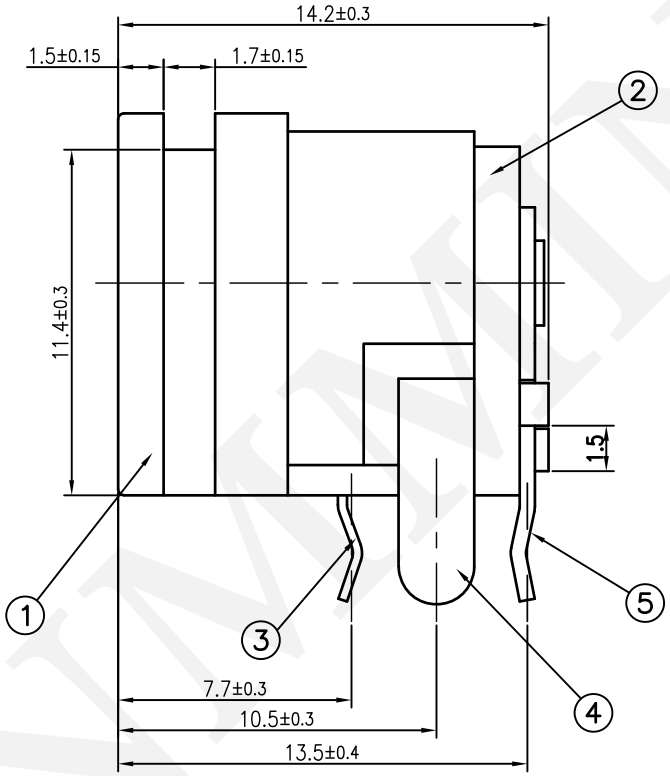

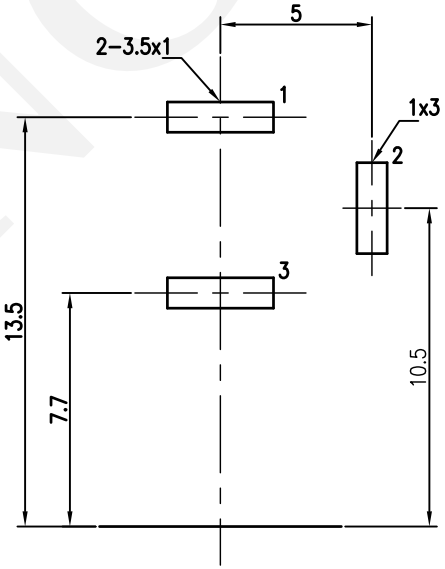

PCB LAYOUT(TOP VIEW) t=1.6mm
NOTE:GENERAL TOLERANCE:±0.05mm

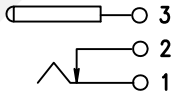

SCHEMATIC

LTR	PART NAME	Q'TY	MATERIAL	REMARK
6	PIN	1	COPPER ALLOY	CuSn−PLATED
5	CONTACT 3#	1	BRASS t=0.5	Ag−PLATED
4	CONTACT 2#	1	BRASS t=0.5	Ag−PLATED
3	CONTACT 1#	1	PHOSPHOR BRONZE t=0.3	Ag−PLATED
2	COVER	1	PBT	Black
1	HOUSING	1	PBT	Black

DIMENSION	TOLERANCE						
120~315	±0.50	DWN	王安盛	DATE	2017.10.21	SCALE 4/1	NAME DC POWER JACK
30~120	±0.35	DSND	王安盛	DATE	2017.10.21	PROJECTION	
6~30	±0.22	CHKD	李阮龍	DATE	2017.10.21		CAT. NO. KMDC062AF03A1BP300
BELOW 6	±0.16	APVD	郭遠峰	DATE	2017.10.21	UNIT:mm	
		KUNMING ELECTRONICS CO.,LTD.					DWN.NO. A-DC062AF03A1BP300 1/1 001

The raw material specified by Sony should meet SS−00259 requirement of the latest version. When such material is used, it should be supplied by Sony designated suppliers.

KUNMING