REVISIONS					
LTR	DESCRIPTION	DATE	REV.	CHKD.	APVD.

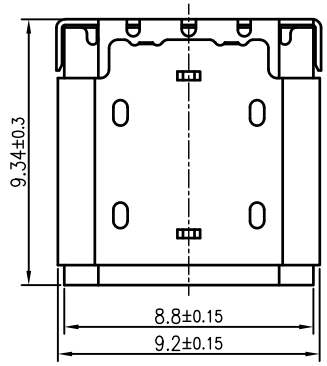

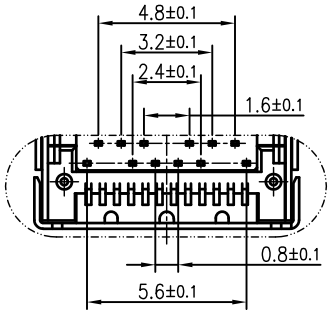

DETAIL A

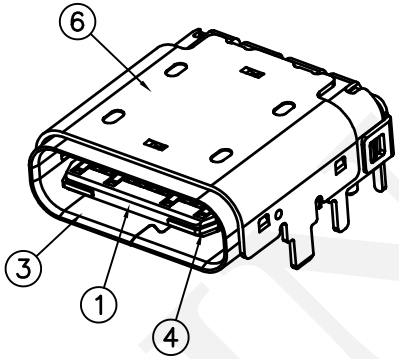

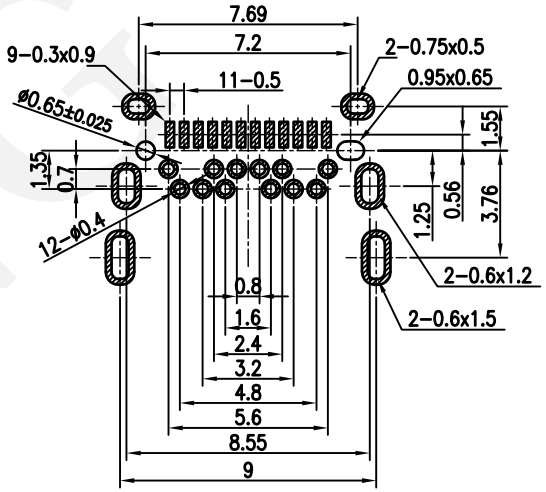

PCB LAYOUT(TOP VIEW) t=1.0mm
NOTE:GENERAL TOLERANCE:±0.03mm

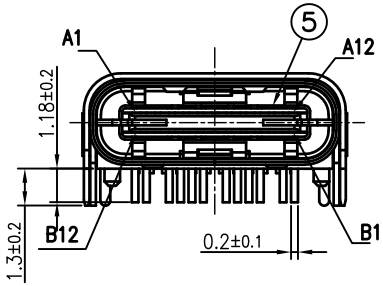

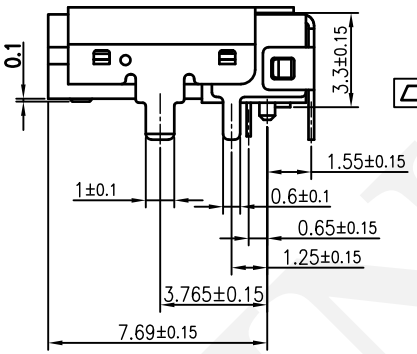

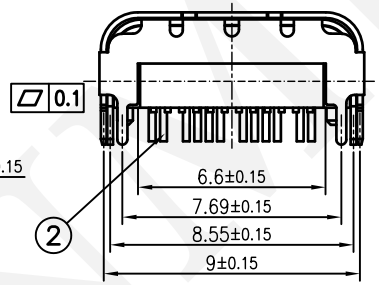

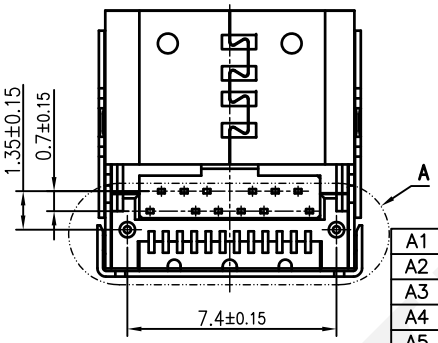

SPECIFICATIONS:

1. *ELECTRICAL CHARACTERISTICS:*
   - *1−1. RATING: 100V, 3A Max.*
   - *1−2. CONTACT RESISTANCE: 40 mΩMax.*
   - *1−3. INSULATION RESISTANCE: 100 MΩ Min.*
   - *1−4. DIELECTRIC WITHSTANDING VOLTAGE: 500V RMS AFTER 1 MINUTE.*
2. *MECHANICAL CHARACTERISTICS:*
   - *2−1. INSERTION FORCE : 5~20N.*
   - *2−2. WITHDRAWAL FORCE : 8~20N*
3. *LIFE TEST: 10,000 CYCLES MIN.*
4. *PART MUST COMPLY ROHS SPECIFICATION.*

PIN	SIGNAL NAME	PIN	SIGNAL NAME
A1	GND	B12	GND
A2	SSTXP1	B11	SSRXP1
A3	SSTXN1	B10	SSRXN1
A4	VBUS	B9	VBUS
A5	CC1	B8	SBU2
A6	DP1	B7	DN2
A7	DN1	B6	DP2
A8	SBU1	B5	CC2
A9	VBUS	B4	VBUS
A10	SSRXN2	B3	SSTXN2
A11	SSRXP2	B2	SSTXP2
A12	GND	B1	GND

LTR	PART NAME	Q'TY	MATERIAL	REMARK
6	TOP SHELL	1	STAINLESS STEEL	Ni PLATED
5	GROUND PLATE	1	STAINLESS STEEL	Ni PLATED
4	MID−PLATE	2	STAINLESS STEEL	
3	SHELL	1	STAINLESS STEEL	Ni PLATED
2	CONTACT	24	COPPER ALLOY	Au/Ni PLATED
1	HOUSING	1	HIGH TEMPERATURE PLASTIC	Black

DIMENSION	TOLERANCE
120~315	±0.50
30~120	±0.35
6~30	±0.22
BELOW 6	±0.16

DWN	王安盛	DATE	2017.10.21	SCALE	4/1
DSND	王安盛	DATE	2017.10.21	PROJECTION	
CHKD	李阮龍	DATE	2017.10.21		
APVD	郭遠峰	DATE	2017.10.21	UNIT: mm	

KUNMING ELECTRONICS CO.,LTD.

NAME USB TYPE-C CONNECTOR

CAT. NO. KMUSBC012AF24S1BR

DWN.NO. Au/Ni PLATED 001 1/1

The raw material specified by Sony should meet SS−00259 requirement of the latest version. When such material is used, it should be supplied by Sony designated suppliers.