REVISIONS					
LTR	DESCRIPTION	DATE	REV.	CHKD.	APVD.

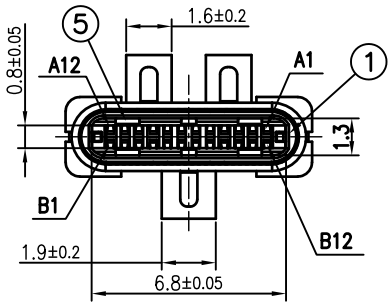

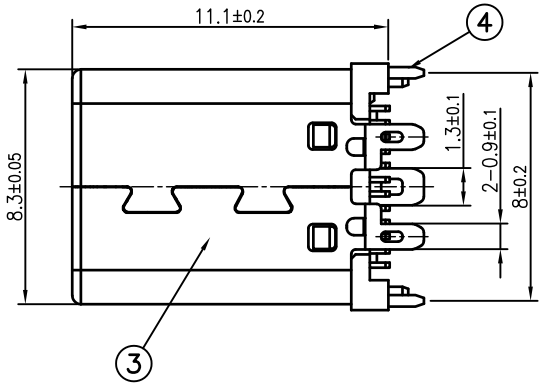

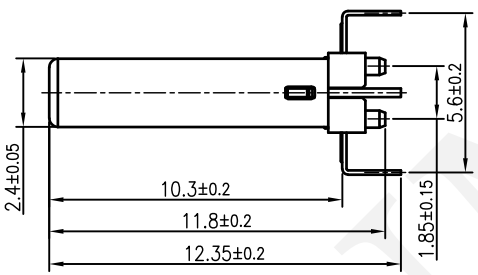

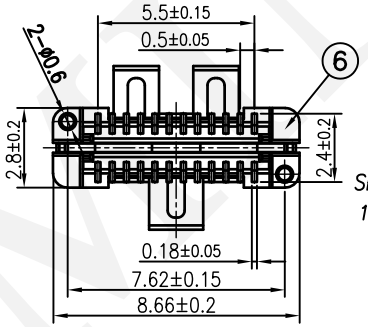

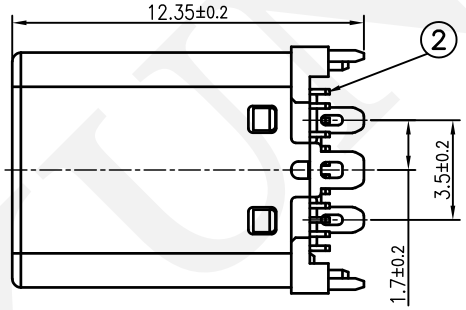

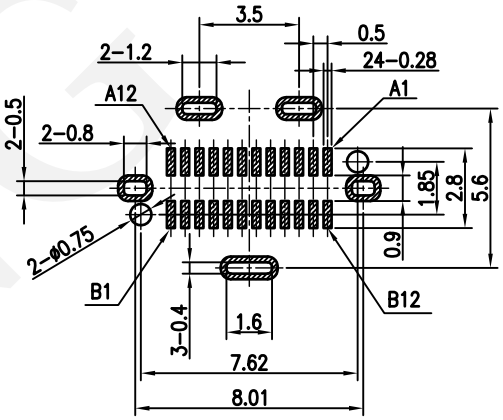

PCB LAYOUT(TOP VIEW) t=0.8mm
NOTE:GENERAL TOLERANCE:±0.05mm

SPECIFICATIONS:

1. *ELECTRICAL CHARACTERISTICS:*
   - *1-1. RATING: 100V, 3A Max.*
   - *1-2. CONTACT RESISTANCE: 40 mΩMax.*
   - *1-3. INSULATION RESISTANCE: 100 MΩ Min.*
   - *1-4. DIELECTRIC WITHSTANDING VOLTAGE: 500V RMS AFTER 1 MINUTE.*
2. *MECHANICAL CHARACTERISTICS:*
   - *2-1. INSERTION FORCE : 5~20N.*
   - *2-2. WITHDRAWAL FORCE : 8~20N*
3. *LIFE TEST: 10,000 CYCLES MIN.*
4. *PART MUST COMPLY ROHS SPECIFICATION.*

LTR	PART NAME	Q'TY	MATERIAL		REMARK
6	MOLDING	1	HIGH TEMPERATURE PLASTIC	Black	
5	GROUND SPRING	4	STAINLESS STEEL		
4	RETENTION SPRING	1	STAINLESS STEEL	Ni PLATED	
3	SHELL	1	STAINLESS STEEL	Ni PLATED	
2	CONTACT	24	COPPER ALLOY	Au/Sn PLATED	
1	INSULATION	1	HIGH TEMPERATURE PLASTIC	Black	

DIMENSION	TOLERANCE						
120~315	±0.50	DWN	王安盛	DATE	2017.10.21	SCALE 4/1	NAME USB TYPE-C CONNECTOR
30~120	±0.35	DSND	王安盛	DATE	2017.10.21	PROJECTION	
6~30	±0.22	CHKD	李阮龍	DATE	2017.10.21		CAT. NO. KMUSBC016AM24S1BY
BELOW 6	±0.16	APVD	郭遠峰	DATE	2017.10.21	UNIT:mm	

KUNMING ELECTRONICS CO.,LTD.

DWN.NO. A-USBC016AM24S1BY 1/1 001

The raw material specified by Sony should meet SS-00259 requirement of the latest version. When such material is used, it should be supplied by Sony designated suppliers.