REVISIONS					
LTR	DESCRIPTION	DATE	REV.	CHKD.	APVD.
1 x1	修改線路圖五金接點和序號,參C03090169.	2009.11.25	李志堅	陸昌妹	郭遠峰
2 x1	增加PCB板孔視圖,參C03090169.	2009.11.25	李志堅	陸昌妹	郭遠峰
3 x1	更改鍍層參照顏色料號表,參C03090169.	2009.11.25	李志堅	陸昌妹	郭遠峰
4 x1	依簽呈字號C803001進行修正.	2009.11.25	李志堅	陸昌妹	郭遠峰
5 x10	To revise the mistake of drawing(ECR:NO.C03110376).	2013.03.28	銀 晶	張啓濤/李阮龍	郭素玲

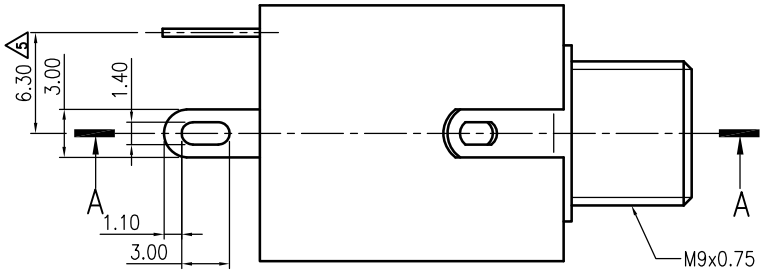

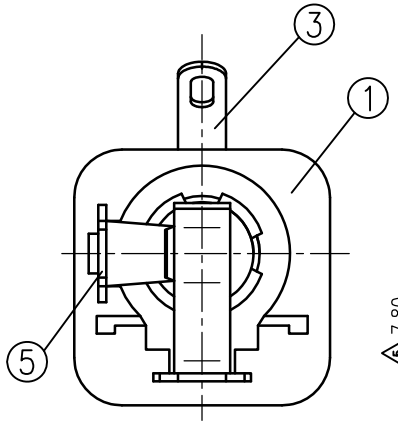

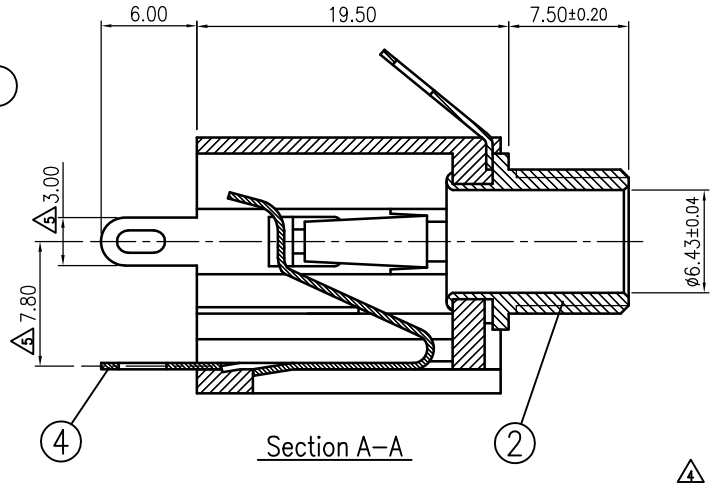

Section A–A

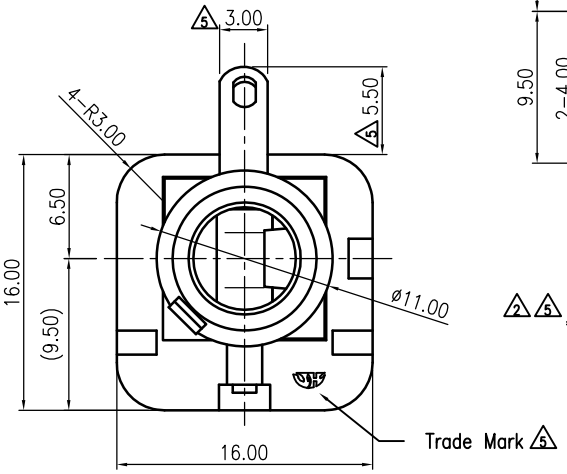

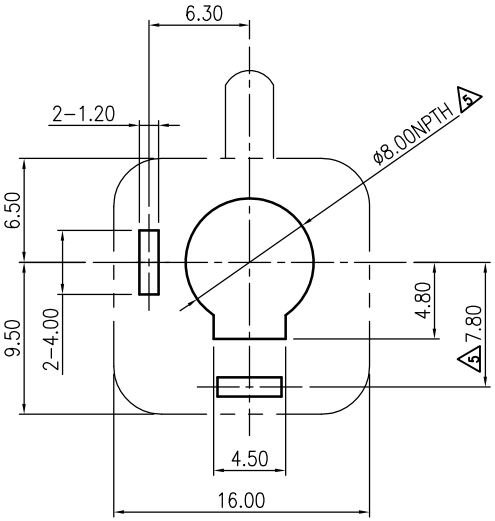

2 5 PCB Layout Dimension (Tolerance: ±0.10)
(Recommend min. Dimension)(Bottom View)

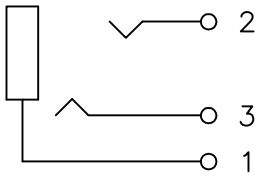

Circuit diagram 1 5

4

LTR	PART NAME	Q'TY	MATERIAL
5	RING SPRING (3)	1	Copper Alloy t=0.40
4	TIP SPRING (2)	1	Copper Alloy t=0.40
3	EARTH TERMINAL(1)	1	Brass t=0.50
2	BUSHING	1	Brass
1	HOUSING	1	PBT+15%GF UL 94V-0

3 Please refer to color and plating combination list.

DIMENSION	TOLERANCE
120~315	±0.5
30~120	±0.35
6~30	±0.22
BELOW 6	±0.16

DWN	王瑞榮	DATE	2001.10.18
DSND	王瑞榮	DATE	2001.10.18
CHKD	WANG	DATE	2001.10.18
APVD	夏正雄	DATE	2001.10.19

SCALE 2/1
PROJECTION
UNIT: mm

KUNMING ELECTRONICS CO.,LTD.

REMARK

NAME PHONE JACK

CAT. NO. HTJ-064-14D_

DWN.NO. A-06414D

1/1

C

UNLESS OTHERWISE SPECIFIED, TOLERANCE ON DECIMAL: ±0.30 ANGLES: ±5°